ENR 1.4 ATS airspace classification

1 Classification of airspaces

ATS airspaces are classified and designated in accordance with the following:

Class A. IFR flights only are permitted, all flights are subject to air traffic control service and are separated from each other.

Class B. IFR and VFR flights are permitted, all flights are subject to air traffic control service and are separated from each other.

Class C. IFR and VFR flights are permitted, all flights are subject to air traffic control service and IFR flights are separated from other IFR flights and from VFR flights. VFR flights are separated from IFR flights and receive traffic information in respect of other VFR flights.

Class D. IFR and VFR flights are permitted and all flights are subject to air traffic control service, IFR flights are separated from other IFR flights and receive traffic information in respect of VFR flights, VFR flights receive traffic information in respect of all other flights.

Class E. IFR and VFR flights are permitted, IFR flights are subject to air traffic control service and are separated from other IFR flights. All flights receive traffic information as far as is practical.

Class F. IFR and VFR flights are permitted, all participating IFR flights receive an air traffic advisory service and all flights receive flight information service if requested.

Class G. IFR and VFR flights are permitted and receive flight information service if requested.

The requirements for the flights within each class of airspace are as shown in the following table.

© 2012 ARMATS CJSC

Class	Type of flight	Separation provided	Service provided	VMC visibility and distance from cloud minima	Speed limitation	Radio communication requirement	Subject to an ATC clearance
A	IFR only	All aircraft	Air traffic control service	Not applicable	Not applicable	Continuous two-way	Yes
B	IFR	All aircraft	Air traffic control service	Not applicable	Not applicable	Continuous two-way	Yes
	VFR	All aircraft	Air traffic control service	8 KM at and above FL 100 AMSL 5 KM below FL 100 AMSL Clear of clouds	Not applicable	Continuous two-way	Yes
C	IFR	IFR from IFR IFR from VFR	Air traffic control service	Not applicable	Not applicable	Continuous two-way	Yes
	VFR	VFR from IFR	1. Air traffic control service for separation from IFR; 2. VFR/VFR traffic information (and traffic avoidance advice on request)	8 KM at and above FL 100 AMSL 5 KM below FL 100 AMSL 1 500 M horizontal; 300 M vertical distance from cloud	250 KT IAS below 3 050 M (10 000 FT) AMSL	Continuous two-way	Yes
D	IFR	IFR from IFR	Air traffic control service including traffic information about VFR flights (and traffic avoidance advice on request)	Not applicable	250 KT IAS below 3 050 M (10 000 FT) AMSL	Continuous two-way	Yes
	VFR	Nil	Traffic information between VFR and IFR flights (and traffic avoidance advice on request)	8 KM at and above FL 100 AMSL 5 KM below FL 100 AMSL 1 500 M horizontal; 300 M vertical distance from cloud	250 KT IAS below 3 050 M (10 000 FT) AMSL	Continuous two-way	Yes
E	IFR	IFR from IFR	Air traffic control service and traffic information about VFR flights as far as practical	Not applicable	250 KT IAS below 3 050 M (10 000 FT) AMSL	Continuous two-way	Yes
	VFR	Nil	flight information service. Traffic information as far as practical	8 KM at and above FL 100 AMSL 5 KM below FL 100 AMSL 1 500 M horizontal; 300 M vertical distance from cloud	250 KT IAS below 3 050 M (10 000 FT) AMSL	No	No

© 2012 ARMATS CJSC

Class	Type of flight	Separation provided	Service provided	VMC visibility and distance from cloud minima	Speed limitation	Radio communication requirement	Subject to an ATC clearance
F	IFR	IFR from IFR as far as practical	Air traffic advisory service; flight information service	Not applicable	250 KT IAS below 3 050 M (10 000 FT) AMSL	Continuous two-way	No
	VFR	Nil	Flight information service	8 KM at and above FL 100 AMSL 5 KM below 10000ft MSLAMSL 1 500 M horizontal; 300 M vertical distance from cloud At and below 3000ft MLS AMSL or 1000ft above terrain whichever is higher – 5 KM, clear of cloud and in sight of ground or water 3 KM, clear of cloud and in sight of ground or water	250 KT IAS below 3 050 M (10 000 FT) AMSL 250 KT IAS 140 KT IAS	No	No
G	IFR	Nil	Flight information service	Not applicable	250 KT IAS below 3 050 M (10 000 FT) AMSL	Continuous two-way	No
	VFR	Nil	Flight information service	8 KM at and above FL 100 AMSL 5 KM below FL 100 AMSL 1 500 M horizontal; 300 M vertical distance from cloud At and below 900 M AMSL or 300 M above terrain whichever is higher – 5 KM, clear of cloud and in sight of ground or water See note c	250 KT IAS below 3 050 M (10 000 FT) AMSL 250 KT IAS 140 KT IAS	Normally no radio communication requirement. However parts of the airspace, designated Traffic Information Areas (TIZ or TIA), has a requirement for continuous two-way radio communication. No requirement for clearance. See note c	No

Note:

a. Classes A, B, D, E, F are not used in Yerevan FIR.
b. Before crossing the Armenian border it is necessary to establish two-way radio communication and to obtain ATC clearance.
c. VFR flight may be permitted under conditions when flight visibility is less than 5 km: Helicopters may be operated in flight visibility 3000m at speeds that will give adequate opportunity to observe other traffic or any obstacles in time to avoid collision.

© 2012 ARMATS CJSC

YEREVAN FIR CLASSES

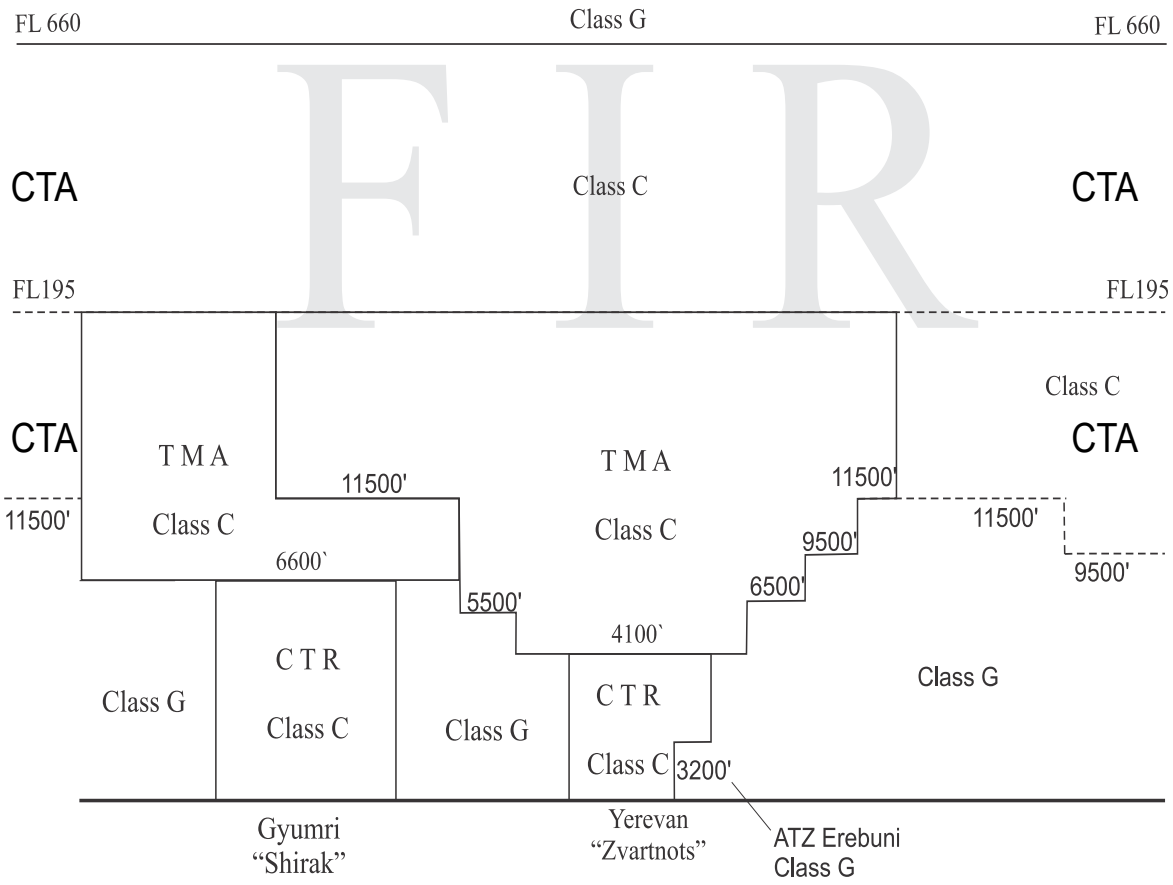

© 2026 ARMATS CJSC