UDYE — YEREVAN / Erebuni (MIL)

UDYE AD 2.1 Aerodrome location indicator and name

UDYE — YEREVAN / Erebuni (MIL)

UDYE AD 2.2 Aerodrome geographical and administrative data

1	*ARP coordinates and site at AD*	40 07 19N 044 27 54E at the center of the RWY
2	*Direction and distance from (city)*	5 KM south from city Yerevan
3	*Elevation/Reference temperature*	2955 FT 22° C
4	*MAG VAR/Annual change*	7 ° E 2025/0.06°
5	*AD Administration, address, telephone, telefax, telex, AFS*	Post: 135 Arshakunyats st., “Erebuni” Airport Administration Yerevan – 04 Republic of Armenia Tel:+ 37410 593544 Tel:+ 37410 294589 Fax:+ 37410 294688 AFS:UDYEYXYX
6	*Types of traffic permitted (IFR/VFR)*	IFR/VFR
7	*Remarks*	Nil

UDYE AD 2.3 Operational hours

1	*AD Administration*	*0500-1400*
2	*Customs and immigration*	H24
3	*Health and sanitation*	*0500-1400*
4	*AIS Briefing Office*	H24
5	*ATS Reporting Office (ARO)*	H24
6	*MET Briefing Office*	H24
7	*ATS*	H24 (MIL FIC)
8	*Fuelling*	H24
9	*Handling*	H24
10	*Security*	H24
11	*De-icing*	NIL
12	*Remarks*	Local time = UTC + 4 hours

UDYE AD 2.4 Handling services and facilities

1	*Cargo-handling facilities*	All modern facilities handling weights up to 5 tones.
2	*Fuel/oil types*	TS – 1, Gipoid Oil, AMG – 10
3	*Fuelling facilities/capacity*	TZ-7,5 (limitation 3 liter per second)
4	*De-icing facilities*	Available
5	*Hangar space for visiting aircraft*	NIL
6	*Repair facilities for visiting aircraft*	NIL
7	*Remarks*	NIL

© 2026 ARMATS CJSC

UDYE AD 2.5 Passenger facilities

1	*Hotels*	In the city
2	*Restaurants*	In the city
3	*Transportation*	Buses and Taxis
4	*Medical facilities*	Hospitals in the city
5	*Bank and Post Office*	In the city
6	*Tourist Office*	In the city
7	*Remarks*	Nil

UDYE AD 2.6 Rescue and fire fighting services

1	*AD category for fire fighting*	Category 7
2	*Rescue equipment*	Available
3	*Capability for removal of disabled aircraft*	Tow Ural 475
4	*Remarks*	There is a co-operation plan with urban fire fighting and medical services.

UDYE AD 2.7 Seasonal availability - clearing

1	*Types of clearing equipment*	Snow Blower, Scrapers
2	*Clearance priorities*	1. RWY, TWY and stands .
3	*Remarks*	I NIL

UDYE AD 2.8 Aprons, taxiways and check locations data

1	*Apron surface and strength*	Stands 0 Surface: Asphalt/Concrete Strength: PCN 30/F/C/Y/U Stands 1-20 Surface: Asphalt/Concrete Strength: PCN 18/F/C/Y/U
2	*Taxiway width, surface and strength*	TWY N 1 Width: 16 M Surface: Asphalt/Concrete Strength: PCN 18/F/C/Y/U TWY N 2, Width: 18 M Surface: Asphalt/Concrete Strength: PCN 30/F/C/Y/U TWY N 3 Width: 16 M Surface: Asphalt/Concrete Strength: PCN 18/F/C/Y/U TWY N 4-5 Width: 12 M Surface: Asphalt/Concrete Strength: PCN 18/F/C/Y/U
3	*ACL location and elevation*	ARP At Stand N 2 2821 FT
4	*VOR/INS checkpoints*	NIL
5	*Remarks*	1. TWY 3 closed, 2. ACFT stands 10-16 are closed.

© 2026 ARMATS CJSC

UDYE AD 2.9 Surface movement guidance and control system and markings

1	*Use of aircraft stand ID signs, TWY guide lines and visual docking/parking guidance system of aircraft stands*	Taxiing guidance signs at all intersections with TWY and RWY, at all holding positions and ILS critical zone.
2	*RWY and TWY markings and LGT*	Markings: RWY: White, TWY: Red(width 15 cm), TDZ: White (dash line 90cm). Lighting: RWY: TWY:
3	*Stop bars*	NIL
4	*Remarks*	NIL

UDYE AD 2.10 Aerodrome obstacles

In Area 2a					
OBST ID/Designation	**OBST type**	**OBST position**	**ELEV/HGT**	**Markings/Type, colour**	**Remarks**
a	**b**	**c**	**d**	**e**	**f**
UDYE0006	Antenna	400718.3N 0442757.5E	3017/85 FT	LGTD	
UDYE0007	Antenna	400720.1N 0442759.9E	2988/56 FT	LGTD	
UDYE0008	Antenna	400721.0N 0442800.8E	2978/46 FT	LGTD	

© 2026 ARMATS CJSC

In Area 2b					
OBST ID/Designation	**OBST type**	**OBST position**	**ELEV/HGT**	**Markings/Type, colour**	**Remarks**
a	**b**	**c**	**d**	**e**	**f**
UDYE0001	NDBER	400845.3N 0442856.8E	3023/91 FT	NIL	
UDYE145	Mill of Yerevan	400952.1N 0443034.0E	3361/429 FT	LGTD	
UDYE149	Marx str.near the bank, crane	401001.0N 0443044.6E	3473/541 FT	LGTD	
UDYE153	Tigran the Great 16 st. building	401019.4N 0443051.0E	3395/463 FT	NIL	
UDYE159	Chimney near "Shirak" hotel	401037.9N 0443032.9E	3378/446 FT	NIL	
UDYE160	Municipality	401029.6N 0443017.3E	3372/440 FT	LGTD	
UDYE162	History museum, antenna	401043.4N 0443050.3E	3404/472 FT	LGTD	
UDYE206	Building -71	400925.0N 0443004.5E	3254/322 FT	NIL	
UDYE207	Building -79	400848.2N 0442923.6E	3222/290 FT	NIL	
UDYE270	Church of Gregory the Illuminator	401019.3N 0443101.6E	3433/501 FT	NIL	
UDYE152	Near Cinema-house, crane	401025.4N 0443120.2E	3550/618 FT	LGTD	
UDYE209	Monument of Liberty	401142.2N 0443056.9E	3912/980 FT	LGTD	
UDYE210	Dvin hotel	401102.0N 0443008.6E	3493/561 FT	NIL	
UDYE212	Monument of Mother Armenia	401142.5N 0443128.8E	3921/989 FT	LGTD	
UDYE154	Rope-way support	401105.3N 0443203.7E	3908/976 FT	LGTD	
UDYE156	Zeitun,16st.building, Vivacell, antenna”*	401226.6N 0443130.3E	4125/1193 FT	LGTD	

© 2026 ARMATS CJSC

In Area 2c					
OBST ID/Designation	**OBST type**	**OBST position**	**ELEV/HGT**	**Markings/Type, colour**	**Remarks**
a	**b**	**c**	**d**	**e**	**f**
UDYE128	Mill of Erebuni	400803.8N 0443113.6E	3340/408 FT	LGTD	
UDYE134	"Nairit" factory, pipe/tube	400742.6N 0442900.9E	3138/206 FT	NIL	
UDYE0002	Hill	401010.2N 0442412.7E	3033/101 FT	NIL	
UDYE135	"POLIVINILATSETAT" Pipe/tube-Brick factory	400730.0N 0442913.9E	3204/272 FT	NIL	
UDYE138	"Nairit " factory tower	400719.8N 0442934.1E	3247/315 FT	NIL	
UDYE146	Tower of the factory	400854.0N 0443023.5E	3298/366 FT	LGTD	
UDYE181	Arin-Berd -82	400824.7N 0443215.9E	3516/584 FT	LGTD	
UDYE151	Tigran the Great str. 18st. building	401001.6N 0443103.5E	3422/490 FT	NIL	
UDYE180	AGAT-75	400851.9N 0442637.9E	3007/75 FT	NIL	
UDYE186	Yerevan THES-1	400707.2N 0443009.7E	3478/546 FT	LGTD	
UDYE192	Police academy, pipe/tube	400926.7N 0442651.7E	3062/130 FT	NIL	
UDYE199	Yerevan railway-station -72	400919.1N 0443030.4E	3342/410 FT	NIL	
UDYE129	Erebuni 16 st. building	400745.9N 0443125.2E	3403/471 FT	NIL	
UDYE130	Erebuni 9 st. building	400736.9N 0443138.0E	3395/463 FT	NIL	
UDYE150	Near Radio-house, crane	401038.3N 0443143.5E	3536/604 FT	LGTD	
UDYE148	"Hrazdan" stadium, luminous	401050.1N 0442936.4E	3480/548 FT	NIL	
UDYE155	Baghramian str; Milk-house, 16 st. building	401131.3N 0443013.3E	3599/667 FT	NIL	
UDYE157	Crane neer "Hrazdan" stadium	401052.3N 0442929.6E	3466/534 FT	LGTD	
UDYE184	Tsitsernakaberd, monument	401108.3N 0442923.9E	3633/701 FT	LGTD	
UDYE187	Yerevan THES -2	400645.8N 0443011.7E	3425/493 FT	LGTD	
UDYE189	Institute-49	400936.6N 0442549.3E	3133/201 FT	NIL	
UDYE191	Mathematician institute computing machine after S. Mergelyan	401159.0N 0442929.1E	3810/878 FT	LGTD	
UDYE195	"Paros"-50	401008.2N 0442734.5E	3324/392 FT	NIL	
UDYE197	Building-29-1	401200.1N 0442843.8E	3706/774 FT	NIL	
UDYE200	Tairov-42	400944.0N 0442509.0E	2977/45 FT	NIL	
UDYE183	Blur Nubarashen-92	400606.2N 0443301.0E	3965/1033 FT	NIL	
UDYE202	Pipe/tube-20	401011.1N 0442509.8E	3195/263 FT	NIL	
UDYE203	Pipe/tube-25	401146.3N 0442723.7E	3695/763 FT	NIL	

© 2026 ARMATS CJSC

In Area 2c					
OBST ID/Designation	**OBST type**	**OBST position**	**ELEV/HGT**	**Markings/Type, colour**	**Remarks**
a	**b**	**c**	**d**	**e**	**f**
UDYE204	Pipe/tube -28-1	401047.8N 0442622.7E	3342/410 FT	NIL	
UDYE213	Karmir Khach-1	401320.3N 0442730.2E	3846/914 FT	NIL	
UDYE214	Leningradian-52	401128.6N 0442747.6E	3508/576 FT	NIL	
UDYE215	Malatia-Sebastia, Tserents-7, antenna	401015.5N 0442716.2E	3285/353 FT	NIL	
UDYE217	Tichina- 34	401059.6N 0442741.9E	3377/445 FT	NIL	
UDYE218	Building 20	401255.4N 0442806.6E	3876/944 FT	NIL	
UDYE249	Karut	401148.3N 0442601.3E	3387/455 FT	NIL	
UDYE182	Alluminium factory, pipe	401304.1N 0443043.3E	4285/1353 FT	LGTD	
UDYE201	TV-tower of Yerevan	401016.5N 0443211.5E	4866/1934 FT	LGTD	
UDYE0009	Building	400806.0N 0442736.0E	3116/184 FT	LGTD	
UDYE00010	Antenna	400742.0N 0442754.0E	2975/43 FT	LGTD	
UDYE188	“State-Supply”-2	401228.9N 0443058.7E	4087/1155 FT	NIL	
UDYE158	Comitas-crane*	401232.0N 0443035.7E	4007/1075 FT	LGTD	
UDYE271	Building, “Centre of geodesy and cartography”	401225.5N 0443029.8E	3987/1055 FT	NIL	
UDYE178	5th massif of Nork, 16st. building	401056.6N 0443402.6E	4638/1706 FT	NIL	
UDYE179	8th massif of Nork, pipe/tube	401038.5N 0443423.3E	4688/1756 FT	NIL	
UDYE133	Gas-filling tower of Nubarashen	400614.2N 0443316.3E	4005/1073 FT	NIL	
UDYE142	Nubarashen 5 st. building	400608.4N 0443352.3E	4104/1172 FT	NIL	
UDYE143	Power communication line of Nubarashen	400602.3N 0443348.6E	4097/1165 FT	NIL	
UDYE193	Nubarashen, radio-tower*	400541.8N 0443323.9E	4085/1153 FT	LGTD	
UDYE132	Power communication line of Nubarashen*	400536.9N 0443331.6E	4029/1097 FT	LGTD	
UDYE131	VIVACELL Nubarashen, antenna*	400732.3N 0443219.8E	3518/586 FT	LGTD	
UDYE137	Pipe/tube-2 I part	400751.8N 0442707.1E	3001/69 FT	NIL	
UDYE136	Pipe/tube-1 I part	400804.4N 0442703.2E	3047/115 FT	LGTD	
UDYZ140	Tower of piano factory	400823.4N 0442754.3E	3077/145 FT	NIL	
UDYZ139	"ARMELECTRO" factory tower	400839.2N 0442833.0E	3145/213 FT	NIL	

© 2026 ARMATS CJSC

In Area 2d					
OBST ID/Designation	**OBST type**	**OBST position**	**ELEV/HGT**	**Markings/Type, colour**	**Remarks**
a	**b**	**c**	**d**	**e**	**f**
UDYE219	Zvartnots, antenna	401014.8N 0441954.9E	3169/366 FT	NIL	
UDYE248	Height 1090	401355.4N 0442243.8E	3579/776 FT	NIL	
UDYE116	ANTENNA PVO-2 Abovian, antenna	401423.3N 0443609.5E	4952/495 FT	LGTD	
UDYE175	Pipe/tube – Metsamor	401044.1N 0440848.0E	3555/506 FT	LGTD	
UDYE196	Radio-tower	401405.7N 0443254.8E	4811/511 FT	LGTD	
In Area 3					
OBST ID/Designation	**OBST type**	**OBST position**	**ELEV/HGT**	**Markings/Type, colour**	**Remarks**
a	**b**	**c**	**d**	**e**	**f**
NIL					

UDYE AD 2.11 Meteorological information provided

1	*Associated MET Office*	ZVARTNOTS
2	*Hours of service* *MET Office outside hours*	H24 –
3	*Office responsible for TAF preparation* *Periods of validity*	ZVARTNOTS 9 HR
4	*Type of landing forecast* *Interval of issuance*	TREND 0.5 HR
5	*Briefing/consultation provided*	Personal consultation
6	*Flight documentation* *Language(s) used*	Charts, abbreviated plain language text English and Russian
7	*Charts and other information available for briefing or consultation*	S, U, P, SIG WX charts
8	*Supplementary equipment available for providing information*	Weather Radar Self-briefing terminal
9	*ATS units provided with information*	Yerevan ACC/APP (and Erebuni FIC)
10	*Additional information (limitation of service, etc.)*	See GEN 3.5 for RVR reporting and location of transmissometer.

UDYE AD 2.12 Runway physical characteristics

Designations RWY NR	TRUE BRG	Dimensions of RWY (M)	Strength (PCN) and surface of RWY and SWY	THR coordinates	THR elevation and highest elevation of TDZ of precision APP RWY
1	2	3	4	5	6
03	032.56˚	2813x45	30/F/C/Y/U Asphalt/Concrete	400642.53N 0442723.86E	THR 2898ft THR 2898ft
← 21	212.57˚	2813x45	30/F/C/Y/U Asphalt/Concrete	400759.42N 0442827.82E	THR 2963ft THR 2963ft DTHR 2957ft
Slope of RWY-SWY	**SWY dimensions (M)**	**CWY dimensions (M)**	**Strip dimensions (M)**	**OFZ**	**Remarks**
7	8	9	10	11	12
0.64%	Nil	Nil	2933X90	According Annex 14	Nil
0.64%	Nil	200	2933X90		400746.46N 0442817.03E DTHR 474m.

UDYE AD 2.13 Declared distances

RWY Designator	TORA (M)	TODA (M)	ASDA (M)	LDA (M)	Remarks
1	2	3	4	5	6
03	2813	2813	2813	2813	Nil
21	2813	3013	2813	2339	Nil

UDYE AD 2.14 Approach and runway lighting

RWY Designator	APCH LGT type LEN INTST	THR LGT colour WBAR	VASIS (MEHT) PAPI	TDZ, LGT LEN	RWY Centre Line LGT Length, spacing colour, INTST	RWY edge LGT LEN, spacing colour, INTST	RWY End LGT colour WBAR	SWY LGT LEN (M) colour	Remarks
1	2	3	4	5	6	7	8	9	10
03	700M LIL	Green	Nil	Nil	Nil	2813M, 60M White Last 600M yellow LIL	Red	Nil	AIMING POINT LIGHTS 300M From 03THR to both side
21	Nil	Nil	Nil	Nil	Nil	2813M, 60M White Last 600M yellow LIL	Red	Nil	Nil

© 2026 ARMATS CJSC

UDYE AD 2.15 Other lighting, secondary power supply

1	*ABN/IBN location, characteristics and hours of operation*	NIL
2	*LDI location and LGT* *Anemometer location and LGT*	NIL NIL
3	*TWY edge and centre line lighting*	NIL
4	*Secondary power supply/switch-over time*	NIL
5	*Remarks*	NIL

UDYE AD 2.16 Helicopter landing area

1	*Coordinates TLOF or THR of FATO Geoid undulation*	Nil
2	*TLOF and/of FATO elevation M/FT*	Nil
3	*TLOF and FATO area dimensions, surface, strength, marking*	Nil
4	*True BRG of FATO*	Nil
5	*Declared distance available*	Nil
6	*APP and FATO lighting*	Nil
7	*Remarks*	Nil

Note: Same as for aircraft.

UDYE AD 2.17 Air traffic services airspace

1	*Designation and lateral limits*	EREBUNI ATZ 395800N 0442815E - 400600N 0442541E - 400830N 0442740E - 400552N 0443454E - 395800N 0442815E
2	*Vertical limits*	3200 FT MSL
3	*Airspace classification*	G
4	*ATS unit call sign* *Language(s)*	EREBUNI Bolotny (FIS) Russian
5	*Transition altitude*	11500 FT MSL
6	*Remarks*	Erebuni military FIC responsible for take off and landing clearances. All flights to Erebuni airport before passing EREVA shall be under control of Yerevan APP.

UDYE AD 2.18 Air traffic services communication facilities

Service designation	Call sign	Frequency	Hours of operation	Remarks
1	**2**	**3**	**4**	**5**
Erebuni Military Flight Information Center	Erebuni Bolotny	119.400 MHz	H24	NIL

UDYE AD 2.19 Radio navigation and landing aids

Type of aid, CAT of ILS/MLS (For VOR/ILS/MLS, give VAR)	ID	Frequency	Hours of operation	Site of transmitting antenna coordinates	Elevation of DME transmitting antenna	Remarks
1	2	3	4	5	6	7
LOM 21	YN	580 kHz	H24	400535.3N 0442629.7E	-	Coverage 60 NM
LMM 21	Y	1180 kHz	H24	400616.6N 0442702.1E	-	Coverage 30 NM
MM 21	1 Dot 1 Dash	75 MHz	H24	400616.6N 0442702.1E	-	
OM 21	2 Dash per sec	75 MHz	H24	400535.3N 0442629.7E		
NDB	FH	465 kHz	H24	400338.5N 0442257.7E		Coverage 45 NM

UDYE AD 2.20 Local traffic regulations

1 Airport regulations

At Yerevan/Erebuni Airport a number of local regulations apply. The regulations are collected in a manual which is available at the AIS Briefing Office . This manual includes, among other subjects, the following:

a. information about aircraft stands ;
b. information about taxiing from aircraft stands;
c. limitations in the operation of large aircraft including limitations in the use of the aircraft"s own power for taxiing;
d. information about taxiing to aircraft stands;
e. information about engine start-up positions;

Information about the regulations for taxiing can be obtained from Erebuni Military Flight Information Center.

When a local regulation is important for the safe operation of aircraft on the apron, Erebuni Military Flight Information Center gives information to each aircraft.

2 Taxiing to and from stands

Arriving aircraft is allocated a stand number by Erebuni Military Flight Information Center.

Departing aircraft obtains pushback, engine start-up clearance and taxi instruction from Erebuni Military Flight Information Center on 119.400 MHZ.

3 Parking area for small aircraft (General aviation)

NIL

4 Parking area for helicopters

NIL

5 Apron — taxiing during winter conditions

NIL

© 2026 ARMATS CJSC

6 Taxiing — limitations

Information concerning limitation for use of TWY and Apron of large aircraft is given to each aircraft from Erebuni Military Flight Information Center.

7 School and training flights — technical test flights — use of runways

School and training flights must be made only after permission thereto has been obtained from ATS authority.

8 Helicopter traffic — limitation

NIL

9 Removal of disabled aircraft from runways

In case when the aircraft is wrecked on a runway, it is removed from the runway by the aerodrome authority as quickly as possible.

UDYE AD 2.21 Noise abatement procedures

NIL

UDYE AD 2.22 Flight procedures

General

Unless special permission has been obtained from Yerevan Approach or Yerevan Tower as appropriate, flight within Yerevan TMA and Yerevan CTR shall be in accordance with the Instrument Flight Rules.

Procedures for IFR flights within Yerevan TMA

The inbound, transit and outbound routes shown on the charts may be varied at the discretion of ATS. If necessary, in case of congestion, inbound aircraft may also be instructed to hold at SEVAN or OKUDA .

Radar procedures within Yerevan TMA

Radar vectoring and sequencing

From SEVAN, GOSIS, LODAC and INDUR begin STARs to the IAF to RWY03 (NDB) so as to ensure an expedite flow of traffic. Radar vectors and flight levels/altitudes will be issued, as required, for spacing and separating the aircraft, so that the correct landing intervals are maintained, taking into account aircraft characteristics.

Radar vectoring charts haven't been published since the instrument approach procedures and altitudes ensured that adequate terrain clearance exists at all times until the point where the pilot resumes his own navigation on final approach or in the circuit.

Surveillance radar approaches

NIL

Precision radar approach

NIL

Communication failure

In case of communication failure, the pilot shall act in accordance with the communication failure procedures in *ICAO Doc. 7030.*

Procedures for VFR flights within Yerevan TMA

See ENR 1.2.

Procedures for VFR flights within Yerevan CTR

See ENR 1.2.

© 2026 ARMATS CJSC

UDYE AD 2.23 Additional information

Bird concentrations in the vicinity of the airport

See ENR 6.5

UDYE AD 2.24 Charts related to an aerodrome

Aerodrome ground Movement and Aircraft Parking Chart — ICAO (see page UDYE AD 2.2-1)

Aerodrome Chart — ICAO (see page UDYE AD 2.2-3)

Aerodrome Obstacle Chart — ICAO Type A (see page UDYE AD 2.2-5)

Area Chart — ICAO (see page UDYE AD 2.2-7)

Standard Departure Route — Instrument SID RNAV1 (GNSS) RWY 21 (see page UDYE AD 2.2-9)

Standard Departure Route — Instrument SID RNAV1 (GNSS) RWY 21 (see page UDYE AD 2.2-11)

Standard Departure Route — Instrument SID RNAV1 (GNSS) RWY 21 (Waypoint Data/List) (see page UDYE AD 2.2-13)

Standard Departure Chart— Instrument (SID) RNAV1 (GNSS) RWY 21— ICAO (see page UDYE AD 2.2-15)

Standard Arrival Route — Instrument STAR RNAV1 (GNSS) RWY03 (see page UDYE AD 2.2-17)

Standard Arrival Route — Instrument STAR RNAV1 (GNSS) RWY03 (see page UDYE AD 2.2-19)

Standard Arrival Route — Instrument STAR RNAV1 (GNSS) RWY03 (Waypoint Data/List) (see page UDYE AD 2.2-21)

Standard Arrival Chart— Instrument (STAR)— ICAO RNAV1 (GNSS) RWY 03 (see page UDYE AD 2.2-23)

Instrument Approach — ICAO Chart NDB RWY 03 (see page UDYE AD 2.2-25)

Visual Approach Chart — ICAO RWY 03/21 (see page UDYE AD 2.2-27)

© 2026 ARMATS CJSC

AERODROME GROUND MOVEMENT AND PARKING CHART - ICAO EREBUNI / BOLOTNY 119.4 **YEREVAN/EREBUNI**

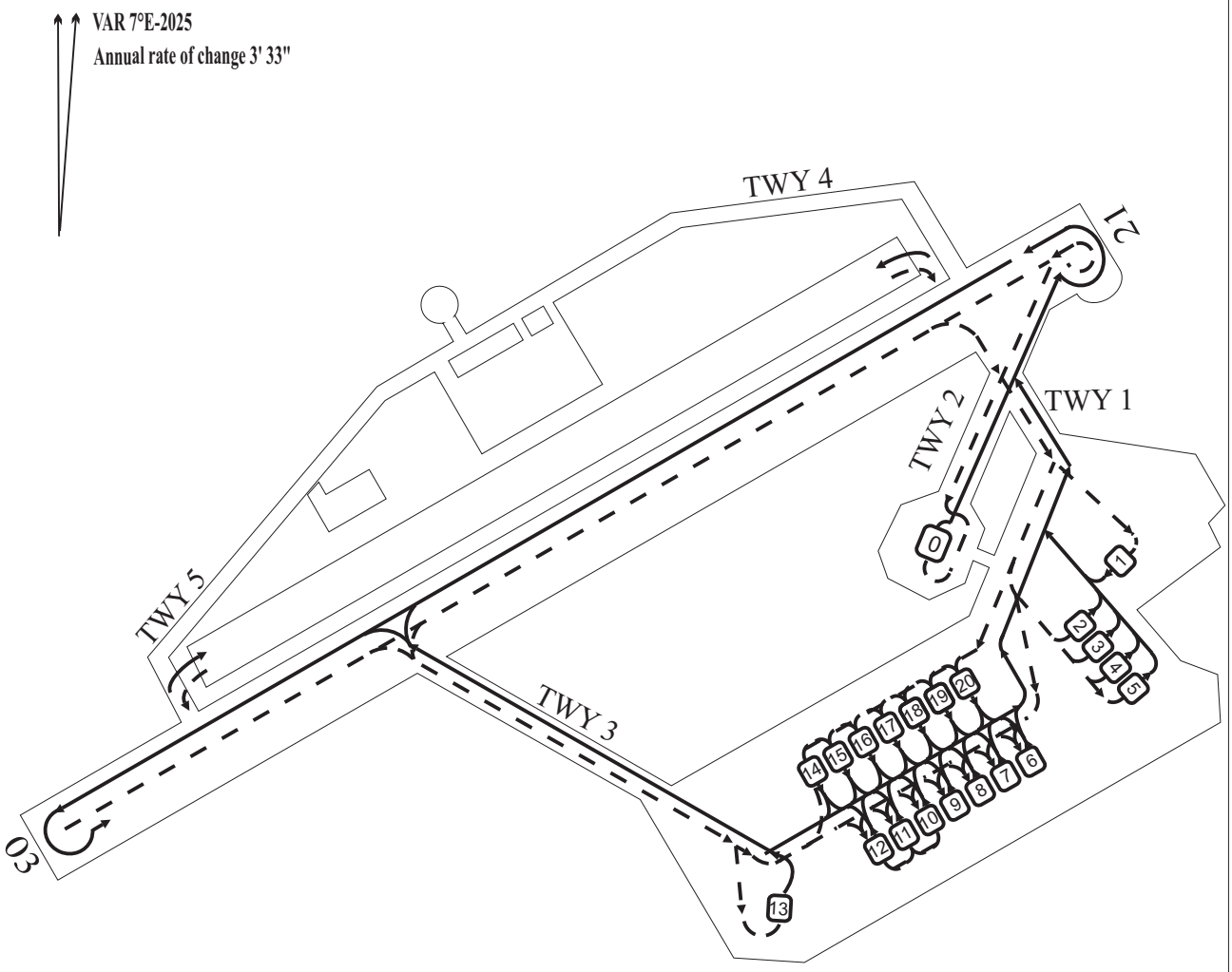

STAND 0 for IL76
STANDS 1,13 for IL18
STANDS 2,8 for AN72, AN74
STANDS 6,7 for AN12
STANDS 5,9,10-12 for AN24, AN26, AN30, AN32
STANDS 3,4,14-20 for YK40, MI8

AFTER LANDING
BEFORE TAKE-OFF

Not to scale

TAXIWAY	STANDS	Coordinates for aircraft stands
WIDTH: 1,3 - 16 m 4,5 - 12 m 2 - 18 m SURFACE: Asphalt-Concrete all TWY. TWY 1 -PCN 18/F/C/Y/U TWY 2 -PCN 30/F/C/Y/U TWY 3 -PCN 18/F/C/Y/U CLOSED TWY 4 -PCN 18/F/C/Y/U TWY 5 -PCN 18/F/C/Y/U	Strength-STENDS: 0 PCN 30/F/C/Y/U 1-20 PCN 18/F/C/Y/U ACFT STANDS 10-16 ARE CLOSED	N I L

CHANGE: MAG VAR

PAGE INTENTIONALLY LEFT BLANK

© ARMATS CJSC

AERODROME CHART - ICAO

ARP
044 27 54 E
40 07 19 N

AD ELEV
2955'

YEREVAN / APP 126.0
EREBUNI / BOLOTNY 119.4

YEREVAN/EREBUNI

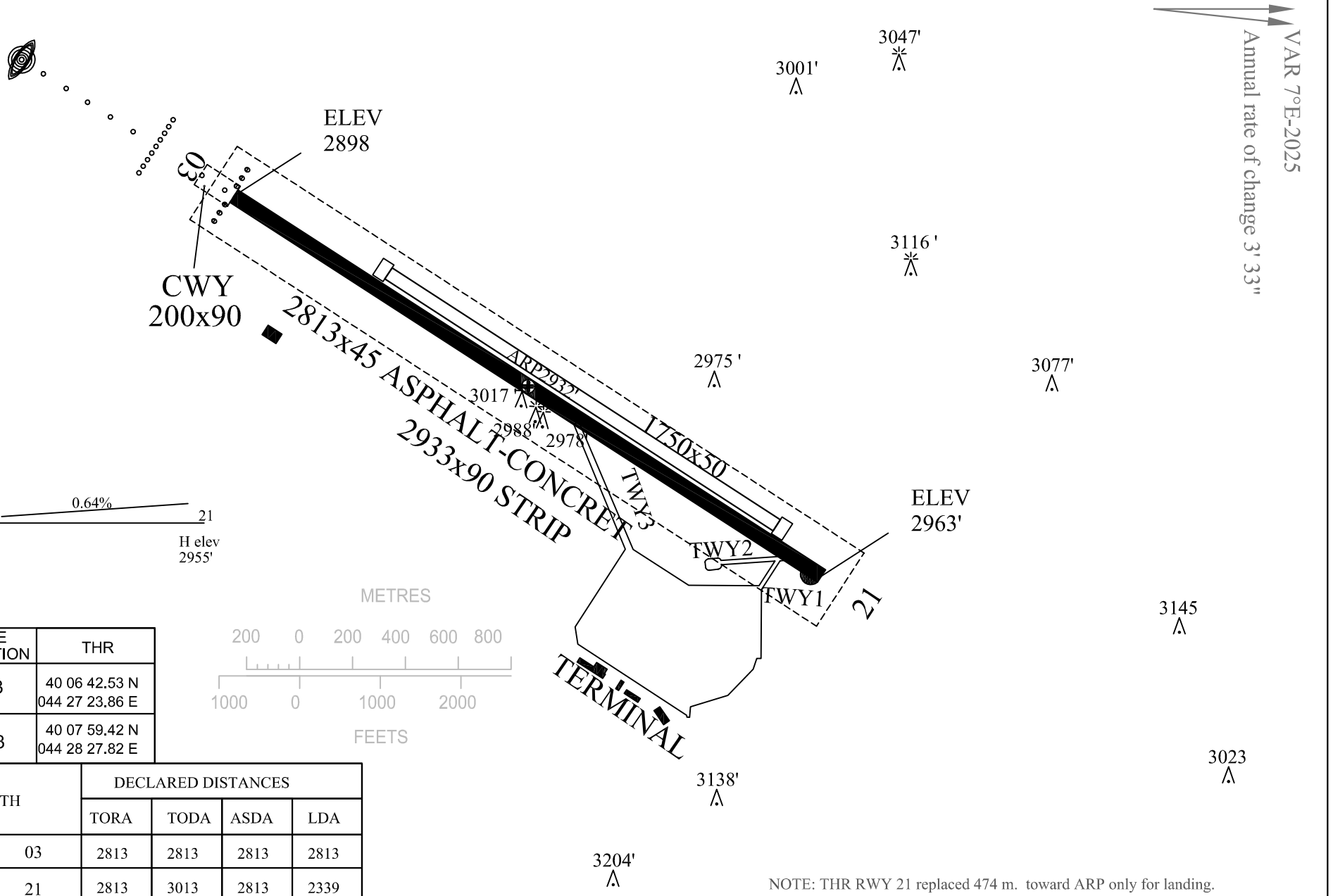

RWY	TRUE DIRECTION	THR
03	033	40 06 42.53 N 044 27 23.86 E
21	213	40 07 59.42 N 044 28 27.82 E

STRENGTH		DECLARED DISTANCES			
		TORA	TODA	ASDA	LDA
PCN 30 /F/C/Y/U	03	2813	2813	2813	2813
	21	2813	3013	2813	2339

NOTE: THR RWY 21 replaced 474 m. toward ARP only for landing.

PAGE INTENTIONALLY LEFT BLANK

DIMENSIONS IN METERS
ELEVATION IN FEET

AERODROME OBSTACLE CHART-ICAO
TYPE A (OPERATING LIMITATIONS)

YEREVAN/EREBUNI

MAG VAR 7°E-2025
Annual rate of change 3' 33"

RWY03/21

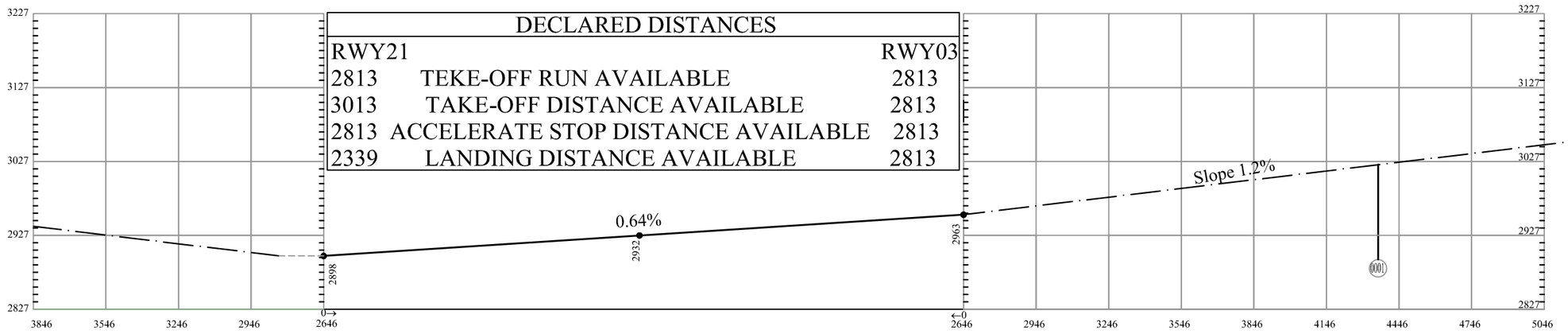

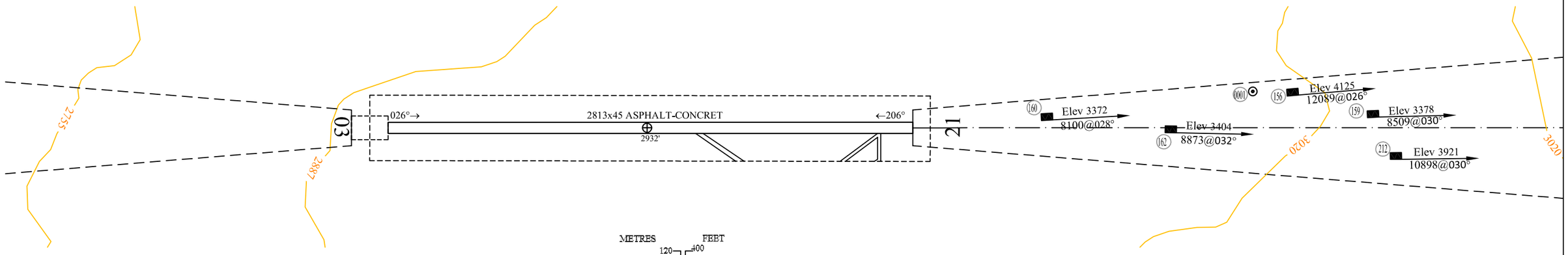

LEGEND	
IDENTIFICATION NUMBER	006
BUILDING	
ANTENA, POLE	
TERRAIN CONTOUR	
ELEVATION	2800

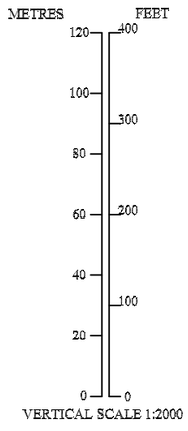

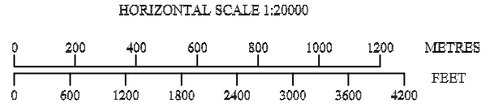

AMENDMENT RECORD		
N	DATA	ENTERED BY

CHANGE:DECLARED DISTANCES, DIM. of RWY

© ARMATS CJSC

PAGE INTENTIONALLY LEFT BLANK

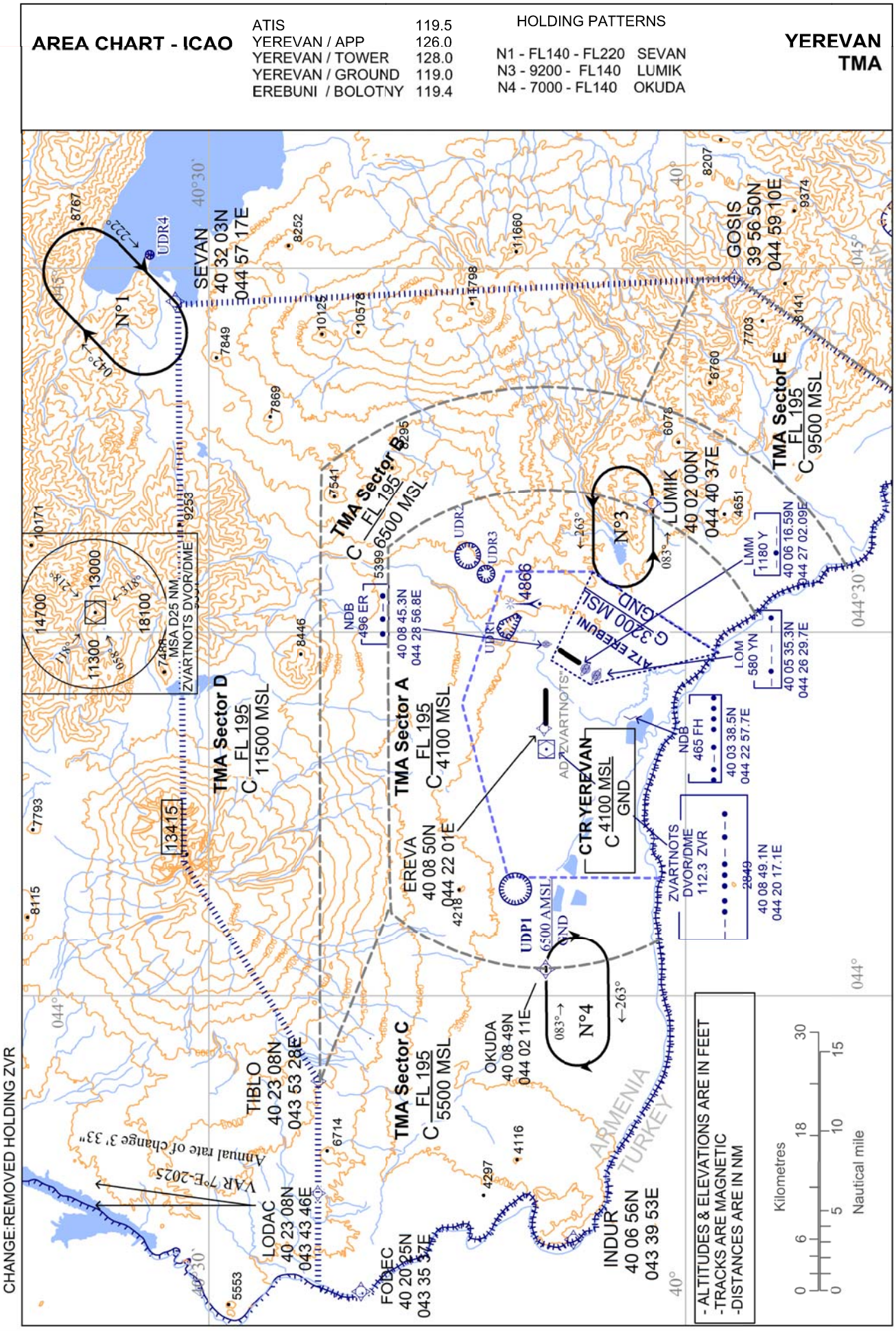
AREA CHART - ICAO
ATIS 119.5
YEREVAN / APP 126.0
YEREVAN / TOWER 128.0
YEREVAN / GROUND 119.0
EREBUNI / BOLOTNY 119.4
HOLDING PATTERNS
N1 - FL140 - FL220 SEVAN
N3 - 9200 - FL140 LUMIK
N4 - 7000 - FL140 OKUDA
YEREVAN TMA
SEVAN 40 32 03N 044 57 17E
GOSIS 39 56 50N 044 59 10E
LUMIK 40 02 00N 044 40 37E
TMA Sector E C FL 195 9500 MSL
TMA Sector B C FL 195 6500 MSL
TMA Sector A C FL 195 4100 MSL
TMA Sector D C FL 195 11500 MSL
TMA Sector C C FL 195 5500 MSL
CTR YEREVAN C 4100 MSL GND
ATZ EREBUNI 3200 MSL GND
UDP1 6500 AMSL GND
EREVA 40 08 50N 044 22 01E
OKUDA 40 08 49N 044 02 11E
TIBLO 40 23 08N 043 53 28E
LODAC 40 23 08N 043 43 46E
FODEC 40 20 25N 043 35 37E
INDUR 40 06 56N 043 39 53E
ZVARTNOTS DVOR/DME 112.3 ZVR
MSA D25 NM
ARMENIA
TURKEY
- ALTITUDES & ELEVATIONS ARE IN FEET
-TRACKS ARE MAGNETIC
-DISTANCES ARE IN NM
Kilometres
Nautical mile
CHANGE:REMOVED HOLDING ZVR

PAGE INTENTIONALLY LEFT BLANK

Standard Departure Route — Instrument SID RNAV1 (GNSS) RWY21

Designator	Route	After take-Off		Remarks
		Climb to	Expect FREQ	
INDUR 3S	Climb on track 205° (T212.2°) to YE440 RT direct to INDUR	A3200	126.0	4.9% up to FL140
Example: SG453 denotes fly-over				

RNAV SID CODING TABLE OF INDUR 3S

Path Terminator	Waypoint			Course/ Track Mag(True)	DIST NM	Turn Direction	Constraints		Navigation Specification	Remarks
	Identifier	Fly Over	Coordinates				Level	IAS		
CF	YE440	Y	N40 05 54 E044 26 44	205° (T212.2°)	1.0			K210-	RNAV1	
DF	INDUR	N	N 40 06 56 E 043 39 53			R	FL140+		RNAV1	

Designator	Route	After take-Off		Remarks
		Climb to	Expect FREQ	
TIBLO 3S	Climb on track 205° (T212.2°) to YE440 RT direct to TIBLO	A3200	126.0	5.6% up to FL140
Example: SG453 denotes fly-over				

RNAV SID CODING TABLE OF TIBLO 3S

Path Terminator	Waypoint			Course/ Track Mag(True)	DIST NM	Turn Direction	Constraints		Navigation Specification	Remarks
	Identifier	Fly Over	Coordinates				Level	IAS		
CF	YE440	Y	N 40 05 54 E 044 26 44	205° (T212.2°)	1.0			K210-	RNAV1	
DF	TIBLO	N	N 40 23 08 E 043 53 28			R	FL140+		RNAV1	

PAGE INTENTIONALLY LEFT BLANK

Standard Departure Route — Instrument SID RNAV1 (GNSS) RWY21

Designator	Route	After take-Off		Remarks
		Climb to	Expect FREQ	
SEVAN 3S	Climb on track 205° (T212.2°) to YE440 RT direct to YE470 then on track 039°(T045.6°) to SEVAN	A3200	126.0	6.8% up to FL130
Example: SG453 denotes fly-over				

RNAV SID CODING TABLE OF SEVAN 3S

Path Terminator	Waypoint			Course/ Track Mag(True)	DIST NM	Turn Direction	Constraints		Navigation Specification	Remarks
	Identifier	Fly Over	Coordinates				Level	IAS		
CF	YE440	Y	N 40 05 54 E 044 26 44	205° (T212.2°)	1.0			K210-	RNAV1	
DF	YE470	N	N 40 20 28 E 044 41 47			R	FL130+		RNAV1	
TF	SEVAN	N	N 40 32 03 E 044 57 17	039° (T045.6°)	17		FL130+		RNAV1	

Designator	Route	After take-Off		Remarks
		Climb to	Expect FREQ	
GOSIS 3S	Climb on track 205° (T212.2°) to YE440 RT direct to GOSIS	A3200	126.0	6.8% up to FL130
Example: SG453 denotes fly-over				

RNAV SID CODING TABLE OF GOSIS 3S

Path Terminator	Waypoint			Course/ Track Mag(True)	DIST NM	Turn Direction	Constraints		Navigation Specification	Remarks
	Identifier	Fly Over	Coordinates				Level	IAS		
CF	YE440	Y	N 40 05 54 E 044 26 44	205° (T212.2°)	1.0			K210-	RNAV1	
DF	GOSIS	N	N 39 56 50 E 044 59 10			R	FL130+		RNAV1	

PAGE INTENTIONALLY LEFT BLANK

Standard Departure Route — Instrument SID RNAV1 (GNSS) RWY21

Waypoint Data/ List

WPT Name	CODING		DISPLAY	
YE440	N 40 05 54.0	E 044 26 44.0	N 40 05.6	E 044 29.7
YE470	N 40 20 28.0	E 044 41 47.0	N 40 20.5	E 044 41.8
SEVAN	N 40 32 03.0	E 044 57 17.0	N 40 32.1	E 044 57.3
INDUR	N 40 06 56.0	E 043 39 53.0	N 40 06.9	E 043 39.9
GOSIS	N 39 56 50.0	E 044 59 10.0	N 39 56.8	E 044 59.2
TIBLO	N 40 23 08.0	E 043 53 28.0	N 40 23.1	E 043 53.5

© 2016 ARMATS CJSC

PAGE INTENTIONALLY LEFT BLANK

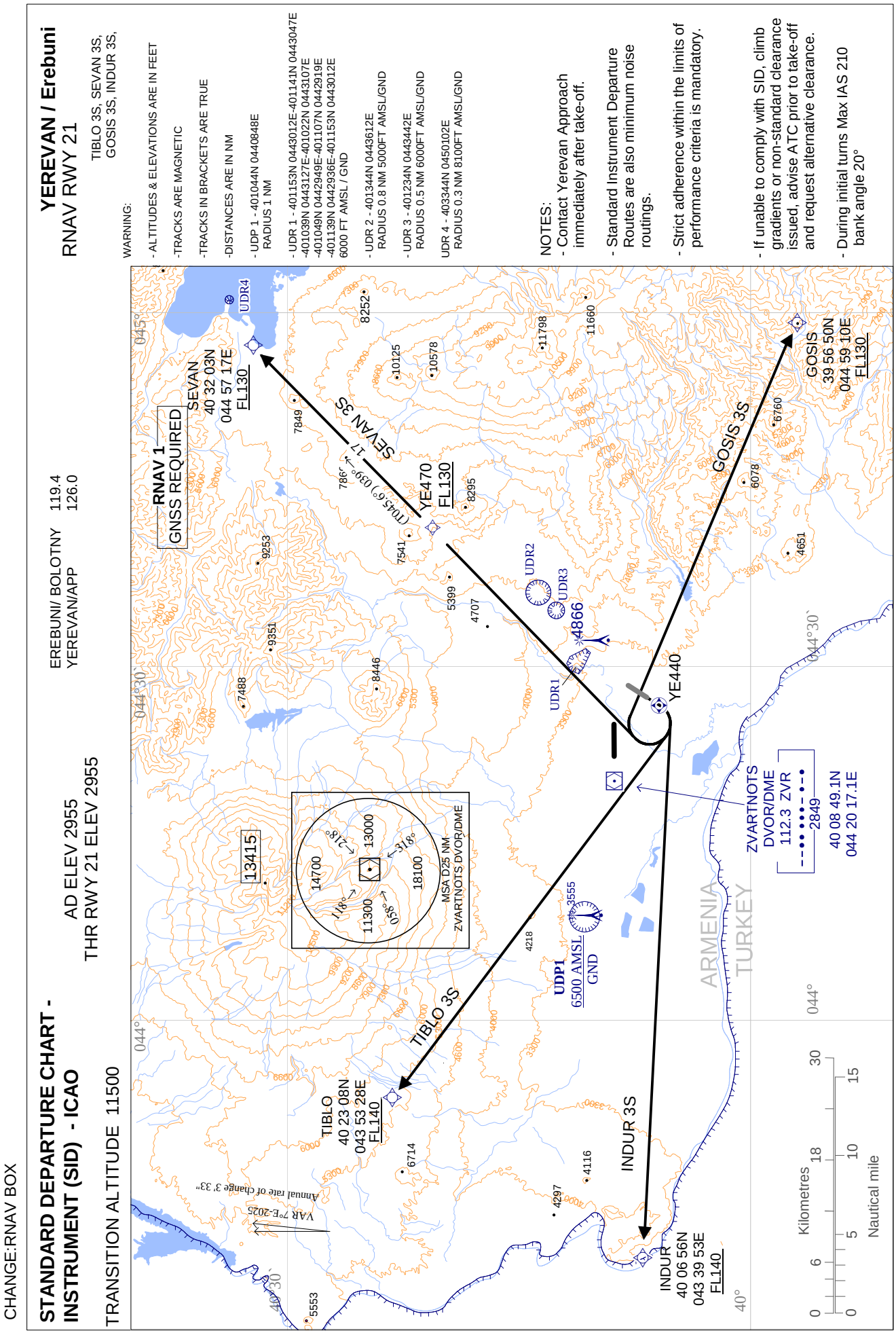
CHANGE:RNAV BOX
STANDARD DEPARTURE CHART - INSTRUMENT (SID) - ICAO
TRANSITION ALTITUDE 11500
AD ELEV 2955
THR RWY 21 ELEV 2955
EREBUNI/ BOLOTNY 119.4
YEREVAN/APP 126.0
YEREVAN / Erebuni
RNAV RWY 21
TIBLO 3S, SEVAN 3S, GOSIS 3S, INDUR 3S,
WARNING:
- ALTITUDES & ELEVATIONS ARE IN FEET
-TRACKS ARE MAGNETIC
-TRACKS IN BRACKETS ARE TRUE
-DISTANCES ARE IN NM
- UDP 1 - 401044N 0440848E RADIUS 1 NM
- UDR 1 - 401153N 0443012E-401141N 0443047E -401039N 0443127E-401022N 0443107E -401049N 0442949E-401107N 0442919E -401139N 0442936E-401153N 0443012E 6000 FT AMSL / GND
- UDR 2 - 401344N 0443612E RADIUS 0.8 NM 5000FT AMSL/GND
- UDR 3 - 401234N 0443442E RADIUS 0.5 NM 6000FT AMSL/GND
UDR 4 - 403344N 0450102E RADIUS 0.3 NM 8100FT AMSL/GND
NOTES:
- Contact Yerevan Approach immediately after take-off.
- Standard Instrument Departure Routes are also minimum noise routings.
- Strict adherence within the limits of performance criteria is mandatory.
- If unable to comply with SID, climb gradients or non-standard clearance issued, advise ATC prior to take-off and request alternative clearance.
- During initial turns Max IAS 210 bank angle 20°
RNAV 1
GNSS REQUIRED
SEVAN
40 32 03N
044 57 17E
FL130
SEVAN 3S
YE470
FL130
GOSIS 3S
GOSIS
39 56 50N
044 59 10E
FL130
YE440
TIBLO 3S
TIBLO
40 23 08N
043 53 28E
FL140
INDUR 3S
INDUR
40 06 56N
043 39 53E
FL140
UDP1
6500 AMSL
GND
UDR1
UDR2
UDR3
UDR4
4866
13415
MSA D25 NM
ZVARTNOTS DVOR/DME
ZVARTNOTS
DVOR/DME
112.3 ZVR
2849
40 08 49.1N
044 20 17.1E
ARMENIA
TURKEY
VAR 7°E-2025
Annual rate of change 3' 33"
044°
044°30`
045°
040°30`
040°
Kilometres
Nautical mile

PAGE INTENTIONALLY LEFT BLANK

Standard Arrival Route — Instrument STAR RNAV1 (GNSS) RWY03

Designator	Route	Remarks
SEVAN 4A	Track 223° (T229.5°) SEVAN – MAXAK; 225° (T231.8°) MAXAK - IAF ZVR; SEVAN (K250-; FL130+) – MAXAK (K250-; FL130+) - IAF ZVR (A7000+)	STAR for ILS/DME, DVOR/DME, RNP APCH

RNAV STAR CODING TABLE OF SEVAN 4A

Path Terminator	Waypoint			Course/ Track Mag(True)	DIST NM	Turn Direction	Constraints		Navigation Specification	Remarks
	Identifier	Fly Over	Coordinates				Level	IAS		
IF	SEVAN	N	N 40 32 03.0 E 044 57 17.0				FL130+	K250-	RNAV1	
TF	MAXAK	N	N 40 21 04.4 E 044 40 31.4	223° (T229.5°)	16.9		FL130+	K250-	RNAV1	
TF	ZVR	N	N 40 08 49.1 E 044 20 17.1	225° (T231.8°)	19.8		A7000+	K220-	RNAV1	

Designator	Route	Remarks
LODAC 1A	Track 165° (T171.5°) LODAC – ISNUC; 086° (T093.2°) ISNUC - IAF OKUDA; LODAC (K250-; FL130+) – ISNUC (K230-; 9800+) - IAF OKUDA (A7000+)	STAR for ILS/DME, DVOR/DME, RNP APCH

RNAV STAR CODING TABLE OF LODAC 1A

Path Terminator	Waypoint			Course/ Track Mag(True)	DIST NM	Turn Direction	Constraints		Navigation Specification	Remarks
	Identifier	Fly Over	Coordinates				Level	IAS		
IF	LODAC	N	N 40 23 08.3 E 043 43 46.2				FL130+	K250-	RNAV1	
TF	ISNUC	N	N 40 09 30.4 E 043 46 25.2	165° (T171.5°)	13.8		A9800+	K230-	RNAV1	
TF	OKUDA	N	N 40 08 49.0 E 044 02 11.0	086° (T093.2°)	12.1		A7000+	K220-	RNAV1	

© ARMATS CJSC

PAGE INTENTIONALLY LEFT BLANK

Standard Arrival Route — Instrument STAR RNAV1 (GNSS) RWY03

Designator	Route	Remarks
GOSIS 4A	Track 286° (T293.0°) GOSIS – BANAG; 284° (T290.6°) BANAG- IAF ZVR; GOSIS (K250-;FL130+) – BANAG (K250-;A10000+) - IAF ZVR (A7000+)	STAR for ILS/DME, DVOR/DME, RNP APCH

RNAV STAR CODING TABLE OF GOSIS 4A

Path Terminator	Waypoint			Course/ Track Mag(True)	DIST NM	Turn Direction	Constraints		Navigation Specification	Remarks
	Identifier	Fly Over	Coordinates				Level	IAS		
IF	GOSIS	N	N 39 56 50.0 E 044 59 10.0				FL130+	K250-	RNAV1	
TF	BANAG	N	N 40 03 53.4 E 044 37 25.0	286° (T293.0°)	18.4		A10000+	K250-	RNAV1	
TF	ZVR	N	N 40 08 49.1 E 044 20 17.1	284° (T290.6°)	14.0		A7000+	K220-	RNAV1	

Designator	Route	Remarks
INDUR 4A	Track 056° (T062.8°) INDUR – ISNUC; 086° (T093.2°) ISNUC - IAF OKUDA; INDUR (K250-; FL140+) – ISNUC (K230-; A11800+) - IAF OKUDA (A7000+)	STAR for ILS/DME, DVOR/DME, RNP APCH

RNAV STAR CODING TABLE OF INDUR 4A

Path Terminator	Waypoint			Course/ Track Mag(True)	DIST NM	Turn Direction	Constraints		Navigation Specification	Remarks
	Identifier	Fly Over	Coordinates				Level	IAS		
IF	INDUR	N	N 40 06 56.0 E 043 39 53.0				FL140+	K250-	RNAV1	
TF	ISNUC	N	N 40 09 30.4 E 043 46 25.2	056° (T062.8°)	5.6		A11800+	K230-	RNAV1	
TF	OKUDA	N	N 40 08 49.0 E 044 02 11.0	086° (T093.2°)	12.1		A7000+	K220-	RNAV1	

© ARMATS CJSC

PAGE INTENTIONALLY LEFT BLANK

Standard Arrival Route — Instrument STAR RNAV1 (GNSS) RWY03

Waypoint Data/ List

WPT Name	CODING		DISPLAY	
SEVAN	N 40 32 03.0	E 044 57 17.0	N 40 32.1	E 044 57.3
INDUR	N 40 06 56.0	E 043 39 53.0	N 40 06.9	E 043 39.9
GOSIS	N 39 56 50.0	E 044 59 10.0	N 39 56.8	E 044 59.2
MAXAK	N 40 21 04.4	E 044 40 31.4	N 40 21.1	E 044 40.5
BANAG	N 40 03 53.4	E 044 37 25.0	N 40 03.9	E 044 37.4
LODAC	N 40 23 08.3	E 043 43 46.2	N 40 23.1	E 043 43.8
ISNUC	N 40 09 30.4	E 043 46 25.2	N 40 09.5	E 043 46.4
OKUDA (IAF)	N 40 08 49.0	E 044 02 11.0	N 40 08.8	E 044 02.2
ZVR (IAF)	N 40 08 49.1	E 044 20 17.1	N 40 08.8	E 044 20.3

© ARMATS CJSC

PAGE INTENTIONALLY LEFT BLANK

CHANGE:REMOVED HOLLDING ZVR

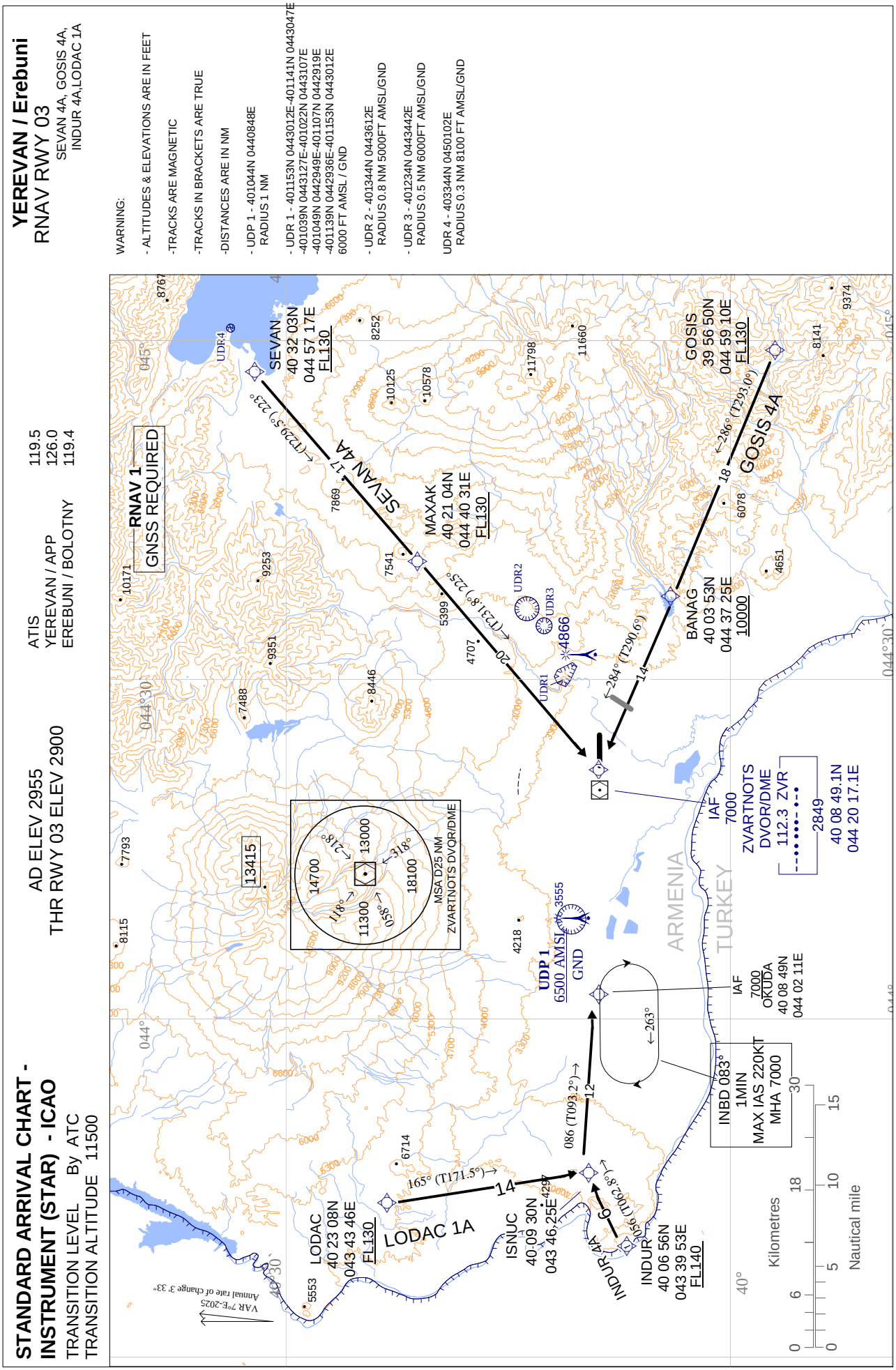

PAGE INTENTIONALLY LEFT BLANK

INSTRUMENT APPROACH CHART - ICAO

YEREVAN / Erebuni

TRANSITION LEVEL By ATC
TRANSITION ALTITUDE 11500

AD ELEV 2955
HEIGHTS RELATED TO
THR RWY 03 ELEV 2900

YEREVAN / APP 126.0
EREBUNI / BOLOTNY 119.4

NDB
RWY 03

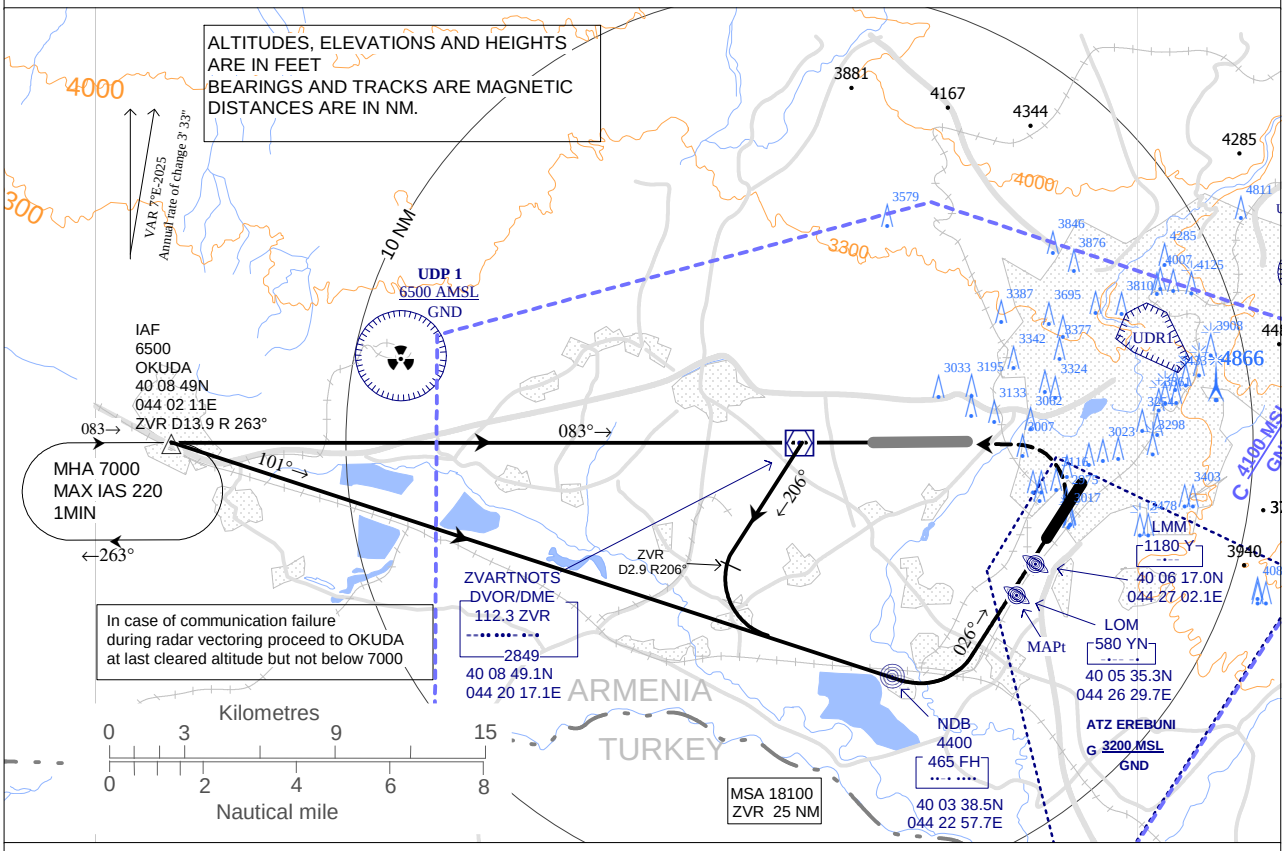

MISSED APCH - Climb straight ahead to 3500 (600), then turn left to OKUDA climbing to 7000, and hold.

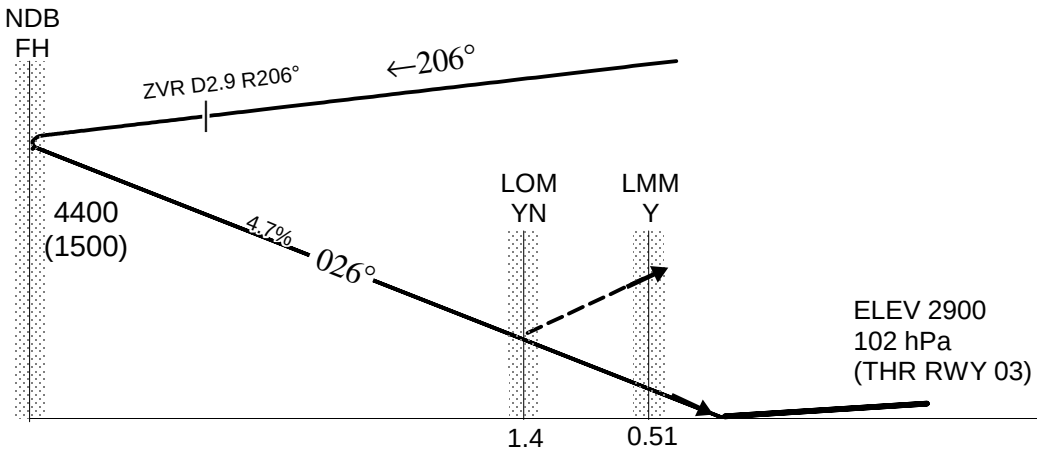

Cat of ACFT	OCA (H)				Ceiling 1500 Visibility 5000 m
	A	B	C	D	
NDB	3350 (450)				

Ground Speed	kt	120	140	160	180	200
Rate of Descent grad 4.7%	ft/min	600	700	800	900	1000

CHANGE:IN CASE OF COMMUNICATION FAILURE...

PAGE INTENTIONALLY LEFT BLANK

VISUAL APPROACH CHART - ICAO

AD ELEV 2955
HEIGHTS RELATED TO AD ELEV

ATIS	119 .5
YEREVAN / APP	126 .0
YEREVAN / TOWER	128.0
EREBUNI / BOLOTNY	119.4

YEREVAN/ EREBUNI
RWY 03/21

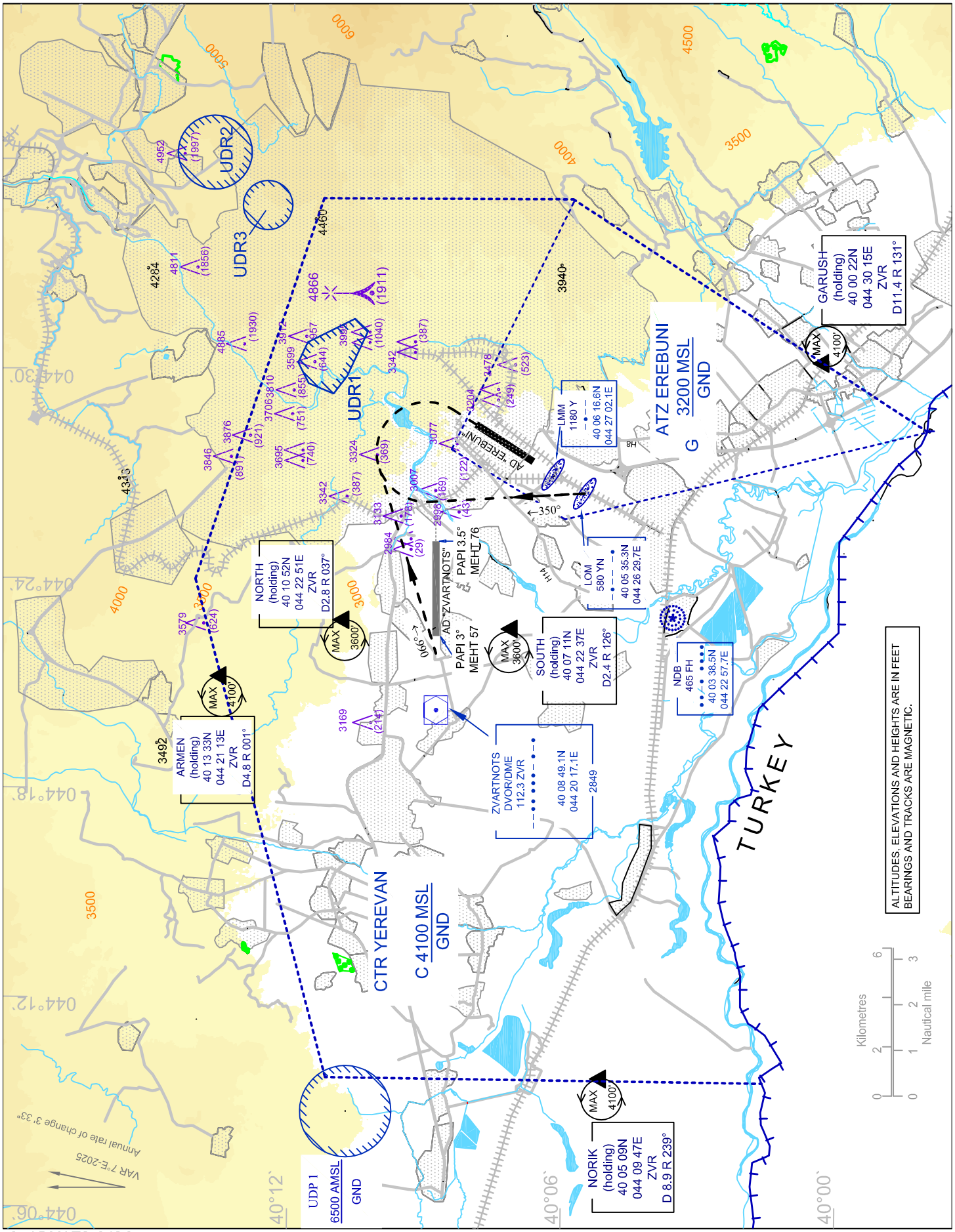

CHANGE: UDP,UDRs

© ARMATS CJSC

PAGE INTENTIONALLY LEFT BLANK